B1 INSTALLATION DRAWING

IF THIS DOCUMENT IS PRINTED IN HARDCOPY, IT IS FOR INFORMATION USE ONLY AND THEREFORE IS NOT SUBJECT TO UPDATING CONTROLS. ALWAYS REFER TO SOLIDWORKS VIEWER FOR LATEST ISSUE

FIRST ANGLE PROJECTION

THIS DRAWING IS CONFIDENTIAL AND IS SUPPLIED ON THE EXPRESS CONDITION THAT IT SHALL NOT BE LOANED OR COPIED OR DISCLOSED TO ANY OTHER PERSON OR USED FOR ANY OTHER PURPOSE WITHOUT THE WRITTEN CONSENT OF AP RACING LTD.

AP Racing
Wheler Road
Coventry
CV3 4LB
Tel: +44 024 7663 9595
Fax: +44 024 7663 9559
e-mail: sales@apracing.co.uk
Web site: HTTP://www.apracing.com

© AP Racing Ltd. 2005

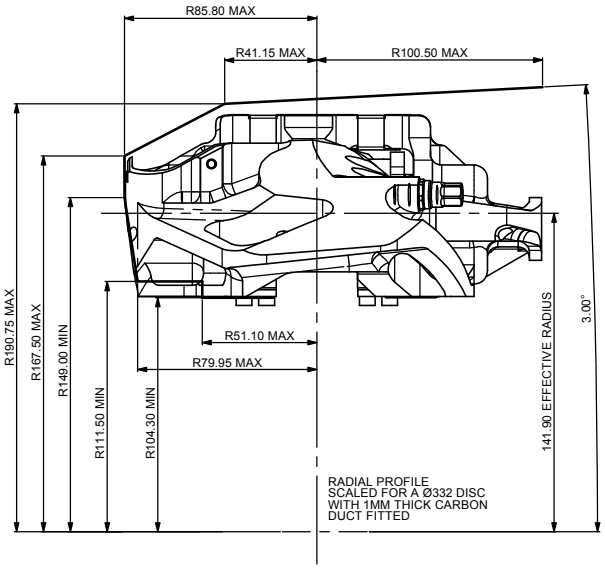

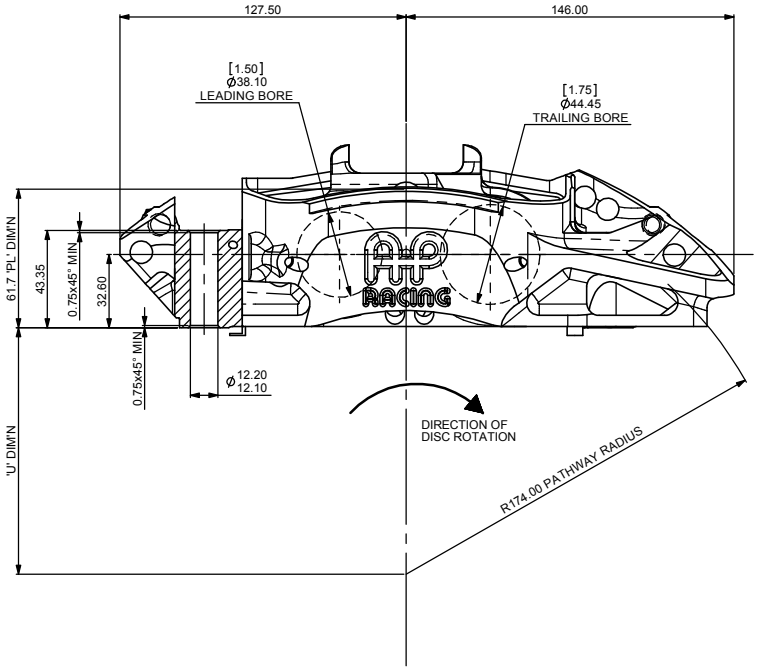

GENERAL DESCRIPTION
4 PISTON DIFFERENTIAL BORE CALIPER TO SUIT UP TO 343 x 32.0 IRON DISC.

APPLICATION
WTC FRONT

TECHNICAL INFORMATION
TOTAL PISTON AREA: 53.84cm²
PISTON MATERIAL: OPTIONS ARE 'L' STAINLESS STEEL OR 'M' TITANIUM, PLEASE SPECIFY IN THE PART NUMBER, SEE BELOW.
BODY MATERIAL: ALUMINIUM ALLOY
ASSEMBLY WEIGHT (LESS PADS): 1.94kg TITANIUM PISTONS
2.11kg STAINLESS PISTONS

INSTALLATION INFORMATION
DISC & CALIPER MOUNTING TOLERANCES TO BE SUCH THAT THE DISC IS CENTRAL TO THE CALIPER TO WITHIN ±0.5mm.
DISC DIAMETRAL CLEARANCE SHOULD BE 2.5mm NOMINAL FROM DISC O/D TO PATHWAY.

KEY TO DIMENSIONS
'PL' DIMN : TOP OF PAD MATERIAL TO MOUNTING BOSS FACE, WITH PAD SITTING DOWN ON LEDGE.
'U' DIMN : WHEEL CENTRE LINE TO CALIPER MOUNTING BOSS FACE = (DISC Ø/2) - PL DIMN

AP RACING TECHNICAL SECTION WILL BE PLEASED TO ADVISE ON THE MOST SUITABLE EQUIPMENT FOR ANY PARTICULAR APPLICATION.

CALIPER PART NUMBERS
CP5780-6S0 [L or M] PD - RIGHT HAND TRAILING (BEHIND AXLE)
CP5780-7S0 [L or M] PD - LEFT HAND TRAILING (FRONT OF AXLE)
CP5780-8S0 [L or M] PD - RIGHT HAND LEADING (BEHIND AXLE)
CP5780-9S0 [L or M] PD - LEFT HAND LEADING (FRONT OF AXLE)

'L' SUFFIX DENOTES SST PISTONS
'M' SUFFIX DENOTES TITANIUM PISTONS

'P' SUFFIX DENOTES CALIPER WITH 'CLIP-IN' TYPE PISTONS. FOR ADDITION OF 'CLIP-IN' PISTON CAPS SEE CP6060-1PCD DRAWING.

'D' SUFFIX DENOTES CARBON DUCT INCLUDED.

CP4528-JL - OPTIONAL CERAMIC COATED PISTON CAP KIT (1.5MM THICK)

NOTE: CALIPERS CAN BE USED IN A LEADING (IN FRONT OF AXLE) POSITION BY SWAPPING THE INLET ADAPTOR AND BLEED SCREW OVER.

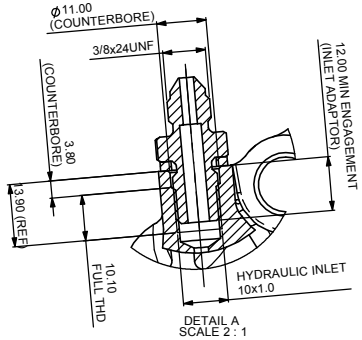

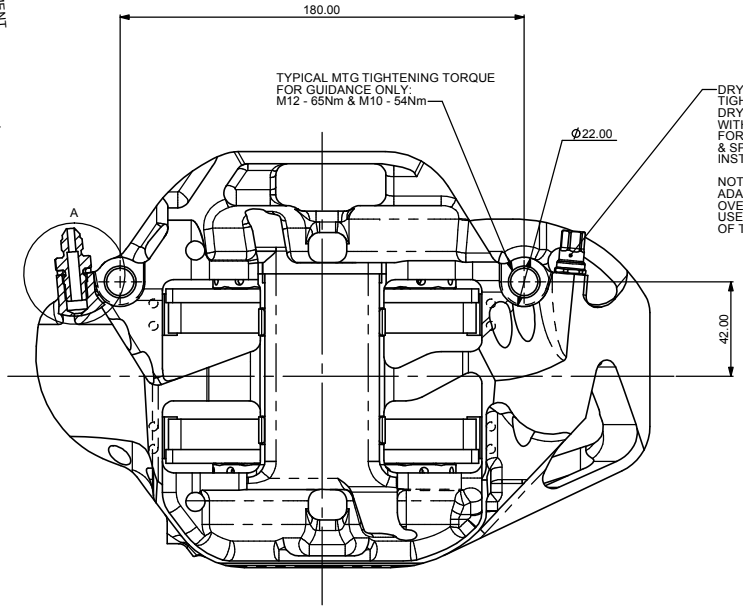

DRY BREAK FITTING
TIGHTENING TORQUE 13Nm
DRY BREAK TO BE USED IN CONJUNCTION WITH CP6300-7 BLEED SYSTEM FITTING. FOR FURTHER DRY BREAK INFORMATION & SPARES REFER TO CP6300-13CD INSTALLATION DRAWING.

NOTE: DRY BREAK AND INLET ADAPTOR MUST BE SWAPPED OVER IF THE CALIPER IS BEING USED IN A LEADING (IN FRONT OF THE AXLE) POSITION.

IMPORTANT NOTE:
THE TAGLESS VERSION IS REQUIRED.

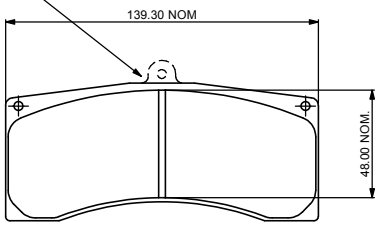

CP5788D48 PAD

PAD AREA 63.2cm²
PAD VOLUME 86.4 cm³
PAD THICKNESS 20mm

Issue No	Alterations: Date & No.	Particulars	Zone	Initials
1	17/03/09 B5515	FIRST ISSUE		SAT

SCALE 1:1	SHEET 1 OF 3
DRAWN	Steve Thomas
APPROVED	
DERIVED FROM	

TITLE
WTC 4-POT RADI-CAL CALIPER

DRG NO. CP5780-6CD

N:\Design\sthomas\Solidworks\Jobs\B5515_CP5780 seal type 34 version\cp5780-6cd.slddrw

Last Saved: sthomas on 17 March 2009 12:24:57

B1 INSTALLATION DRAWING

IF THIS DOCUMENT IS PRINTED IN HARDCOPY, IT IS FOR INFORMATION USE ONLY AND THEREFORE IS NOT SUBJECT TO UPDATING CONTROLS. ALWAYS REFER TO SOLIDWORKS VIEWER FOR LATEST ISSUE

FIRST ANGLE PROJECTION

THIS DRAWING IS CONFIDENTIAL AND IS SUPPLIED ON THE EXPRESS CONDITION THAT IT SHALL NOT BE LOANED OR COPIED OR DISCLOSED TO ANY OTHER PERSON OR USED FOR ANY OTHER PURPOSE WITHOUT THE WRITTEN CONSENT OF AP RACING LTD.

AP Racing
Wheler Road
Coventry
CV3 4LB
Tel: +44 024 7663 9595
Fax: +44 024 7663 9559
e-mail: sales@apracing.co.uk
Web site: HTTP://www.apracing.com

© AP Racing Ltd. 2005

Issue No	Alterations		Zone	Initials
	Date & No.	Particulars		

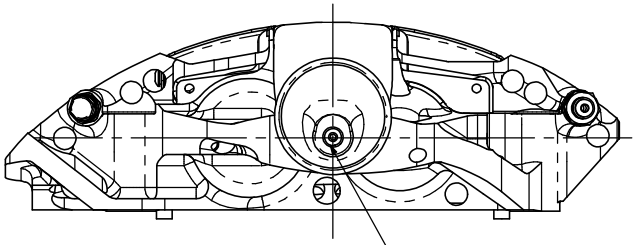

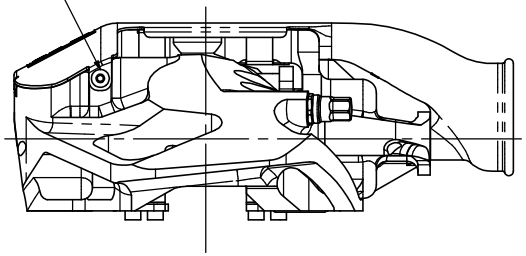

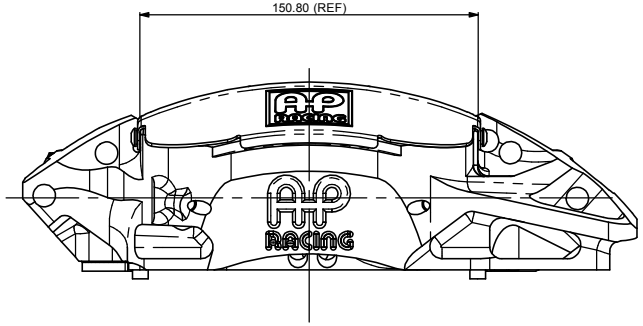

M4x0.70 DUCT MOUNTING SCREW. THE RECESS IN THE DUCT CAN BE COVERED WITH DUCK TAPE OR SIMILAR ONCE THE SCREW HAS BEEN FITTED TO CREATE A SMOOTH SURFACE FOR THE AIR FLOW

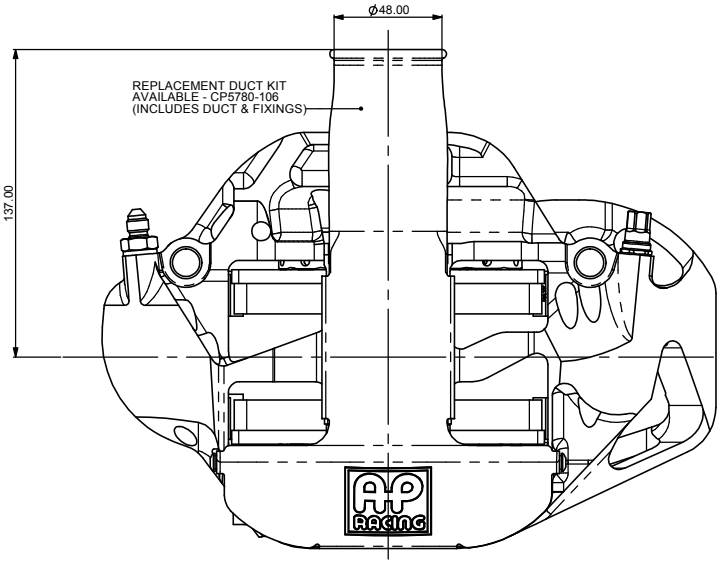

SCALE 1:1	SHEET 1 OF 3
DRAWN	Steve Thomas
APPROVED	
DERIVED FROM	

TITLE
WTC 4-POT RADI-CAL CALIPER

DRG NO. CP5780-6CD

B1 INSTALLATION DRAWING

IF THIS DOCUMENT IS PRINTED IN HARDCOPY, IT IS FOR INFORMATION USE ONLY AND THEREFORE IS NOT SUBJECT TO UPDATING CONTROLS. ALWAYS REFER TO SOLIDWORKS VIEWER FOR LATEST ISSUE

FIRST ANGLE PROJECTION

THIS DRAWING IS CONFIDENTIAL AND IS SUPPLIED ON THE EXPRESS CONDITION THAT IT SHALL NOT BE LOANED OR COPIED OR DISCLOSED TO ANY OTHER PERSON OR USED FOR ANY OTHER PURPOSE WITHOUT THE WRITTEN CONSENT OF AP RACING LTD.

AP RACING
AP Racing
Wheler Road
Coventry
CV3 4LB
Tel: +44 024 7663 9595
Fax: +44 024 7663 9559
e-mail: sales@apracing.co.uk
Web site: HTTP://www.apracing.com

© AP Racing Ltd. 2005

Issue No	Alterations Date & No.	Particulars	Zone	Initials

CALIPER SPARE PARTS

REF.	QTY / CALIPER	PART NUMBER	DESCRIPTION
1	2	CP5990-106	1.75" PISTON, STAINLESS STEEL
1	2	CP5789-106	1.75" PISTON, TITANIUM
2	2	CP5990-107	1.50" PISTON, STAINLESS STEEL
2	2	CP5789-107	1.50" PISTON, TITANIUM
3	1	CP4518-JL	HIGH TEMP SEAL KIT
4	1	CP5780-105	CENTRE PAD ABUTMENT
5	4	CP5780-104	PAD ABUTMENT WEAR PLATES
6	4	CP3395-163	PAD SUPPORT PLATE
7	8	CP3215-115	M4 BOLTS
8	1	CP6160-107	INLET FITTING
9	1	KL44517	COPPER GASKET

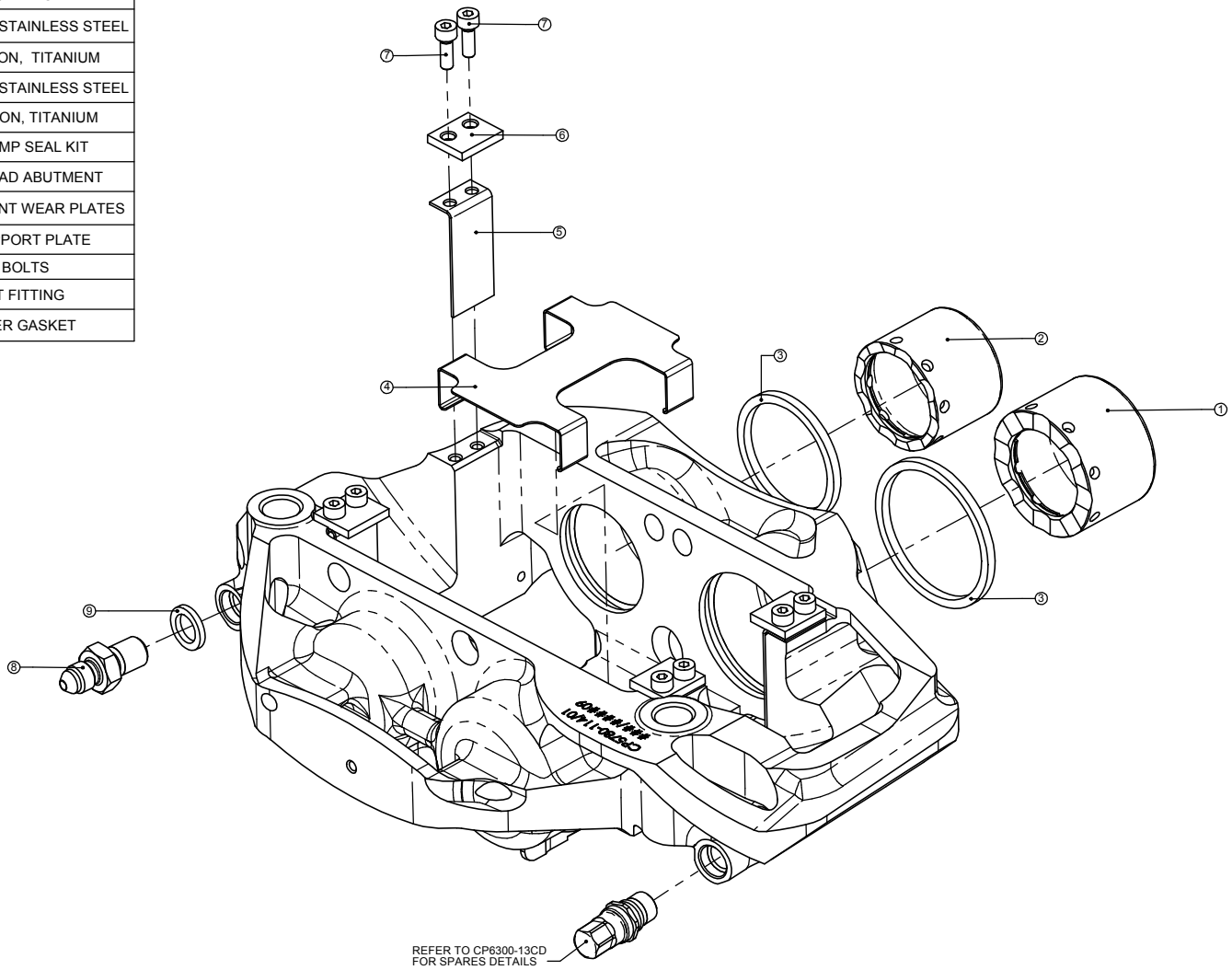

SCALE 1:1	SHEET 1 OF 3
DRAWN	Steve Thomas
APPROVED	
DERIVED FROM	

TITLE
4-POT WTC RADI-CAL CALIPER

DRG NO. CP5780-6CD