PUBLICATION P12.119

ISSUE :3

If this document is printed in hardcopy, it is for information use only and therefore is not subject to updating controls. Always refer to viewer for latest issue.

FIRST ANGLE PROJECTION

THIS DRAWING IS CONFIDENTIAL AND IS SUPPLIED ON THE EXPRESS CONDITION THAT IT SHALL NOT BE LOANED OR COPIED OR DISCLOSED TO ANY OTHER PERSON OR USED FOR ANY OTHER PURPOSE WITHOUT THE WRITTEN CONSENT OF AP RACING LTD.

© AP Racing Ltd. 2000

AP Racing
Wheler Road
Coventry
CV3 4LB

Tel: +44 024 7663 9595 e-mail: sales@apracing.co.uk
Fax: +44 024 7663 9559 Web site: HTTP://www.apracing.com

BMW MINI 16/17" AFTERMARKET WHEEL
KIT NUMBER CP7611-1000

Ref	Description	QTY
1	Caliper Right Hand	1
	Caliper Left Hand	1
2	Disc Right Hand	1
	Disc Left Hand	1
3	Caliper Mounting Bolt	4
4	Washer /0.5Shim	12
5	Pad Set	1
6	Anti-Rattle Clip	2
7	Pad Retainer Pin	2
8	Hose Kit	2
9	Banjo Bolt	2
10	Gasket	4
11	Hose Fitting Location Washer	2
12	Nylon Armouring	2
13		
14		
15		
16		
17		
18		
19		
20		
21		
22		
23		
24		
25		

Tightening Torques

Part Ref #	Torque
BoltRef 4 Loctite	68NM
Bolt Ref 11	25NM
Caliper Bleed Screw	17NM

BRAKE DISC WEAR	
NEW	MIN WORN
24.00mm	23.00mm

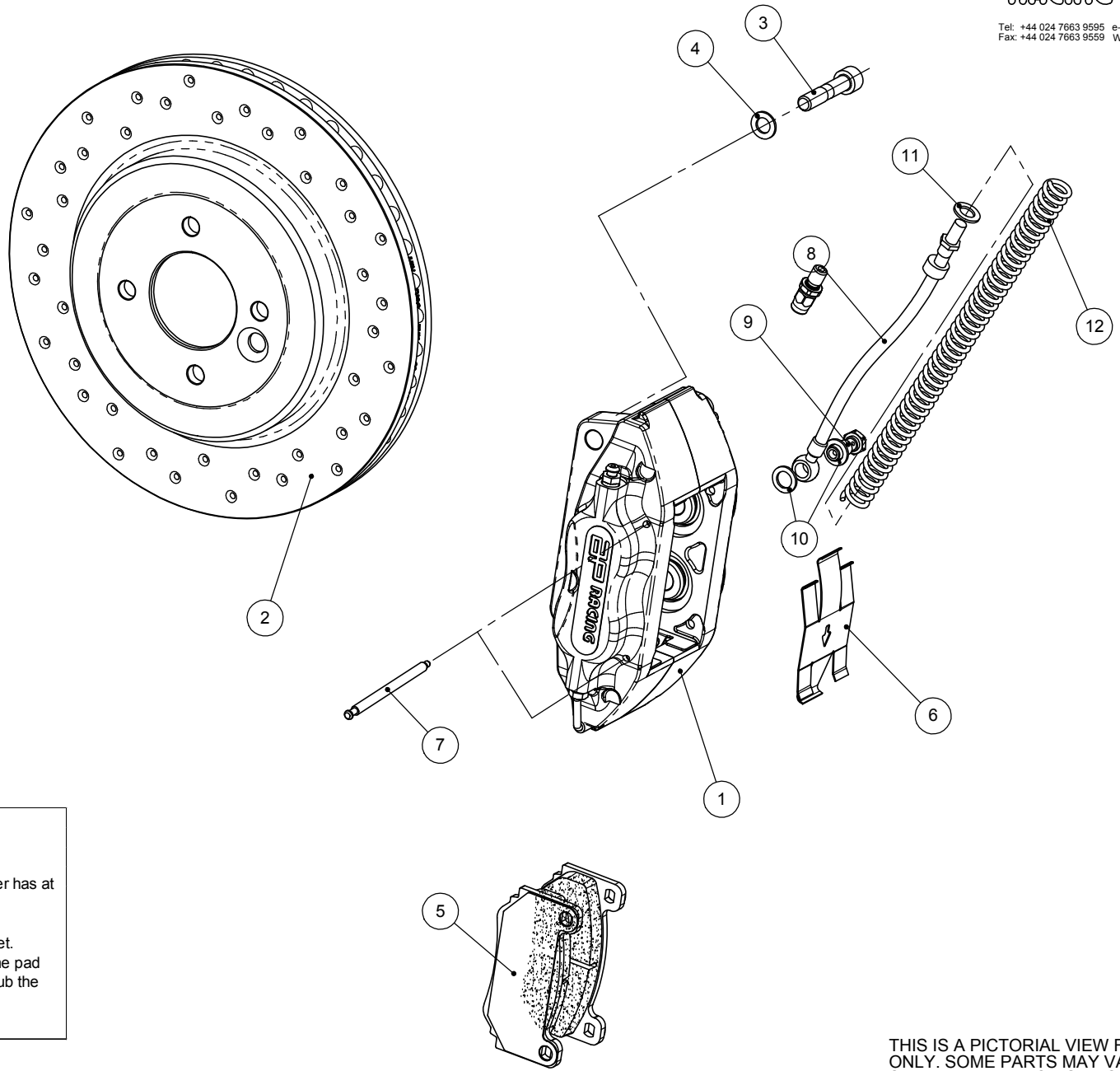

Use the 0.5mm shims to locate the caliper centrally over the disc.
Fit the required amount of shims between bracket and lug.
Ensure the disc is firmly back against the hub when checking the caliper has at least 1mm to 1.25mm side face clearance.
NOTE: Shims may not be required!
Cut nylon armouring to fit either side of the central hose locating bracket.
When fitting pads ensure the anti-rattle clip end tags sit on the top of the pad not trapped inside the pad backplate lugs. if this happens the clip will rub the disc.

THIS IS A PICTORIAL VIEW FOR REFERENCE ONLY. SOME PARTS MAY VARY FROM THOSE SUPPLIED. AP RACING RESERVE THE RIGHT TO CHANGE COMPONENTS WITHOUT PRIOR NOTICE.

PLEASE RETAIN THIS SHEET FOR FUTURE REFERENCE

DRAWN : astrachan